HIGH FIDELITY MASTER AMPLIFIER, TYPE HFMA2

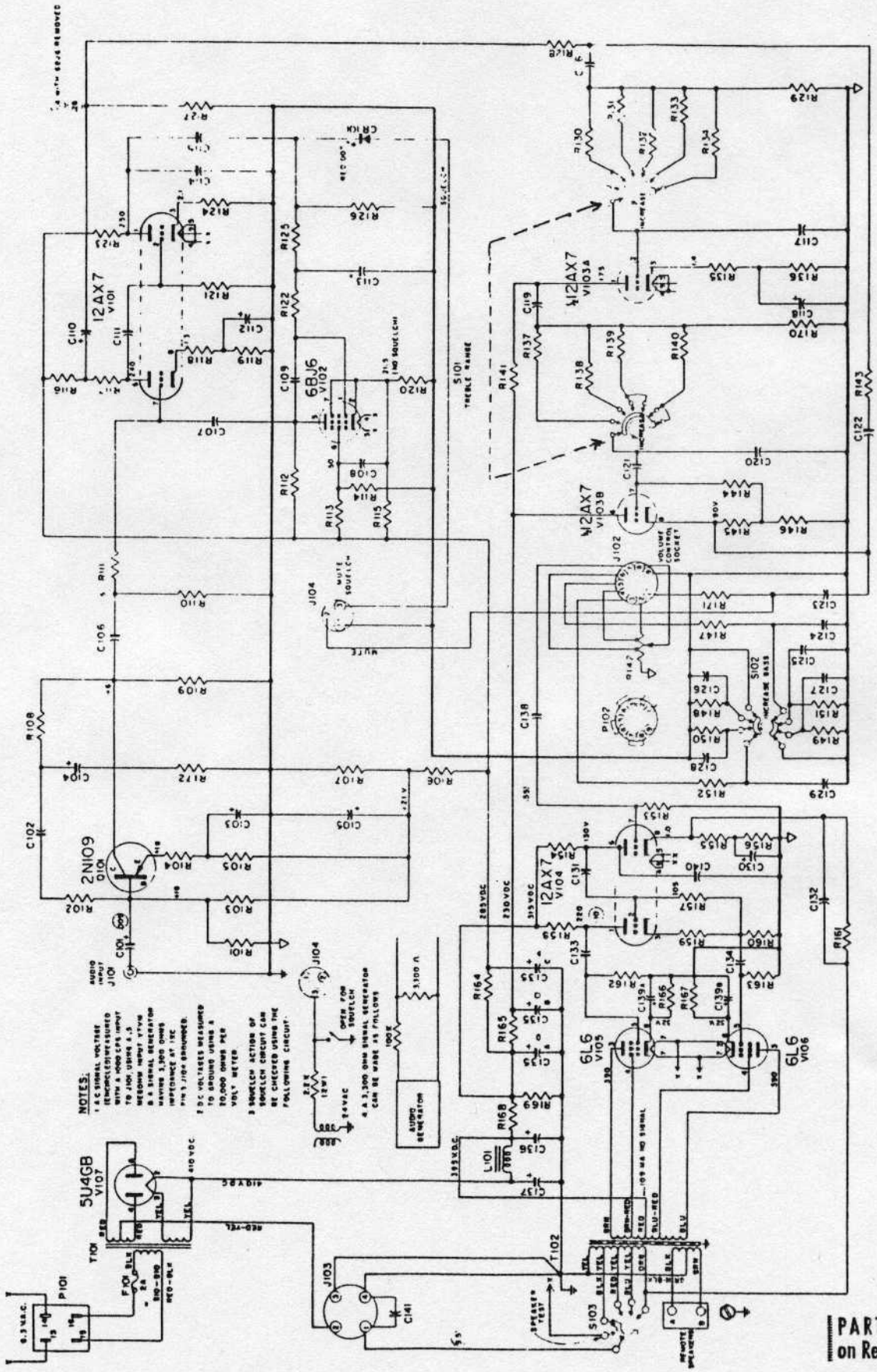

PARTS LIST on Reverse Side