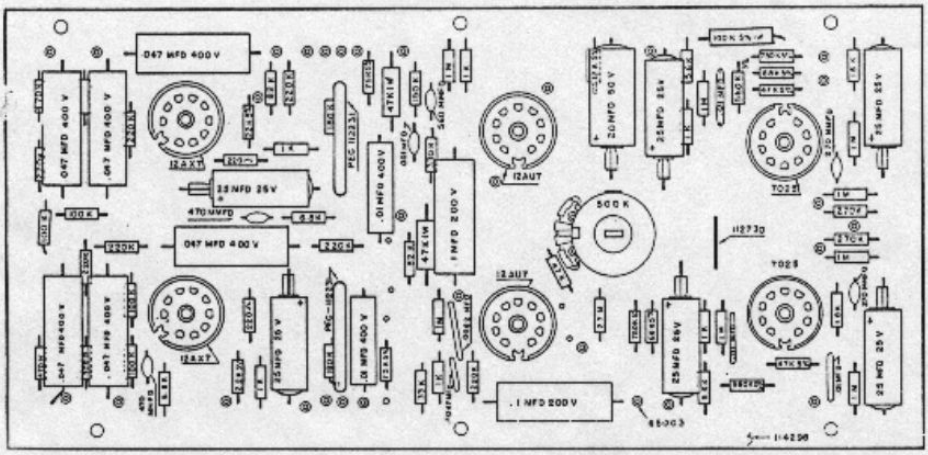

NOTE: For Code Values See Schematic Diagram 114512

Fig. 69. PRINTED CIRCUIT BOARD - MODEL 534 DUAL CHANNEL AMPLIFIER (TOP SIDE)

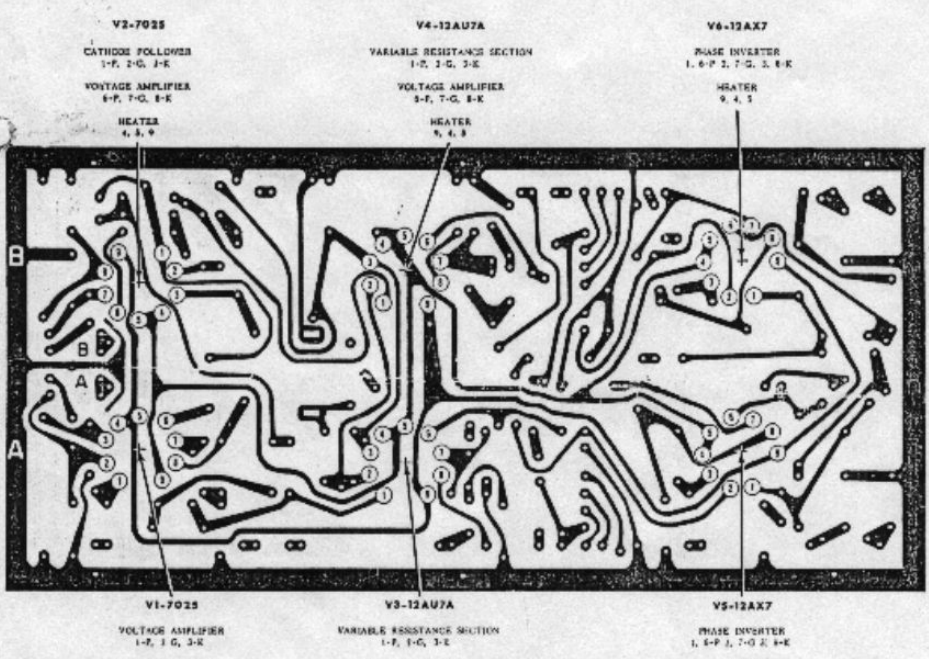

Fig. 70. PRINTED CIRCUIT BOARD - MODEL 534 DUAL CHANNEL AMPLIFIER (UNDER SIDE)

34 AMPLIFIER – STEREO

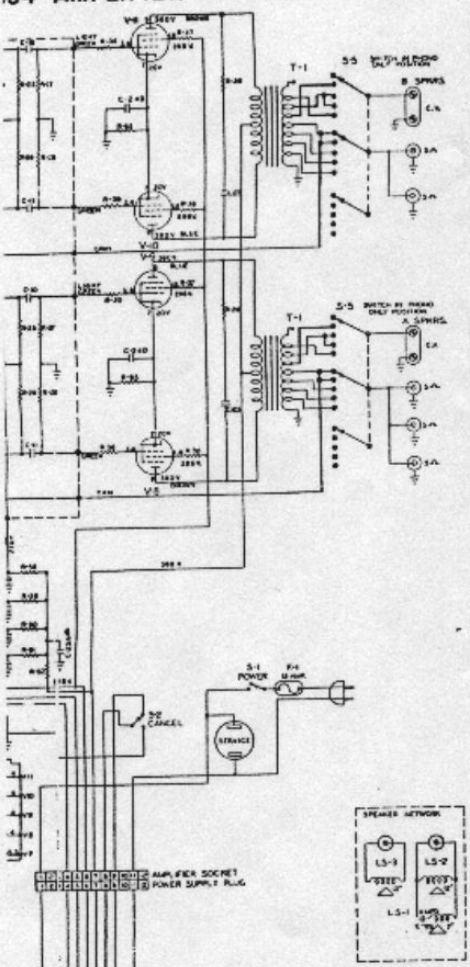

THE SCHEMATIC SHOWN IN THE LATEST CONDITION AT THE TIME OF PRINTING

ITEM	PART NO.	VALUE	REMARKS
R-1	72286-32	1 MEG	1/2W 20%
R-2	72210-32	220 K	1/2W 20%
R-3	72244-32	1 MEG	1/2W 20%
R-4	72183-32	1.8 K	1/2W 10%
R-5	72238-31	47 K	1/2W 5%
R-6	72228-31	68 K	1/2W 5%
R-7	72238-31	39 K	1/2W 5%
R-8	72231-31	33 K	1/2W 5%
R-9	72264-32	1 MEG	1/2W 20%
R-10	72167-32	1.5	1/2W 10%
R-11	72210-32	3.3 K	1/2W 10%
R-12	72232-32	3.9 K	1/2W 10%
R-13	72264-32	1 MEG	1/2W 20%
R-14	72264-32	1 MEG	1/2W 20%
R-15	72184-32	1.8 K	1/2W 10%
R-16	72219-32	470 K	1/2W 20%
R-17	72237-31	33 K	1/2W 5%
R-18	72290-32	82 K	1/2W 20%
R-19	72218-32	220 K	1/2W 20%
R-20	72184-32	1.8	1/2W 10%
R-21	72148-32	220 K	1/2W 10%
R-22	72218-32	4.3 K	1/2W 10%
R-23	72248-32	6.8 K	1/2W 10%
R-24	72248-32	220 K	1/2W 10%
R-25	72240-32	100 K	1/2W 10%
R-26	72240-32	100 K	1/2W 10%
R-27	72228-32	68 K	1/2W 20%
R-28	72230-32	470 K	1/2W 20%
R-29	72250-31	22 K	1/2W 5%
R-30	72274-32	2.1 MEG	1/2W 5%
R-31	72164-31	100 K	1/2W 5%
R-32	72210-31	2 K	1/2W 5%
R-33	72232-32	3.9 K	1/2W 10%
R-34	114282	500 K	BASS CONTROL
R-35	72192-32	1 K	1/2W 10%
R-36	72192-32	1 K	1/2W 10%
R-37	72210-31	47 K	1/2W 20%
R-38	72210-31	47 K	1/2W 20%
R-39	72238-32	33 K	1/2W 10%
R-40	72264-32	1 MEG	1/2W 20%
R-41	72264-32	1 MEG	1/2W 20%
R-42	72264-32	1 MEG	1/2W 20%
R-43	72238-32	33 K	1/2W 10%
R-44	72250-32	180 K	1/2W 10%
R-45	72208-32	47 K	1/2W 20%
R-46	72218-32	220 K	1/2W 20%
R-47	72264-32	1 MEG	1/2W 20%
R-48	72228-32	27 K	1/2W 10%
R-49	72208-32	1.5 MEG	1/2W 20%
R-50	114284	500 K	LOUDNESS CONTROL
R-51	72184-32	410 K	1/2W 10%
R-52	72182-32	1.2 K	1/2W 10%
R-53	72248-32	120 K	1/2W 10%
R-54	72248-32	100 K	1/2W 10%
R-55	72214-32	150 K	1/2W 10%
R-56	72230-32	47 K	1/2W 10%
R-57	114283	500 K	BALANCE
R-58	72282-32	47 K	1 W 10%
R-59	72252-32	47 K	1 W 10%
R-60	72252-32	47 K	1 W 10%
R-61	72252-32	47 K	1 W 10%
R-62	71908-2	500 Ω	5 WATT
R-63	72158-32	39 K	1/2 W 10%
R-64	72158-32	39 K	1/2 W 10%
R-65	72293-2	300 Ω	5 WATT
R-66	72248-32	180 K	1/2W 10%
R-67	73484-2	8.5 Ω	10 WATT
R-68	71907	150 Ω	15 WATT
R-69	71907	8 Ω	10 WATT
R-70	72248-32	220 K	1/2W 20%
R-71	72228-32	33 K	1/2W 10%

ITEM	PART NO.	VALUE	REMARKS
C-1	71818-44	270 MMFD	CERAMIC
C-2	73062-31	33 MFD	25V ELECT
C-3	70148	.01	CERAMIC
C-4	73842-31	25 MFD	25V ELECT
C-5	71241-12	1 MFD	200 VOLT
C-6	71817-16	150 MFD	CERAMIC
C-7	71818-44	470 MMFD	CERAMIC
C-8	71241-14	.5 MFD	400 VOLT
C-9	71818-40	470 MMFD	CERAMIC
C-10	71224-4	.047 MFD	400 VOLT
C-11	71224-4	.047 MFD	400 VOLT
C-12	71224-4	.047 MFD	400 VOLT
C-13	73842-31	25 MFD	25 V. ELECT
C-14	73840-2	20 MFD	25 V. ELECT
C-15	70148	.01 MFD	CERAMIC
C-16	70148	.01 MFD	CERAMIC
C-17	70614-4	1 MFD	200 VOLT
C-18	73878	2 MFD	50 VOLT
C-19	71241-12	.05 MFD	200 VOLT
C-20	71238-11	.25 MFD	200 VOLT
C-21	71240-11	.1 MFD	200 VOLT
C-22	71818-44	270 MMFD	CERAMIC
C-23	73002-46	.0022 MFD	1600 VOLT
C-24A	73475	20 MFD	300V ELECT
C-24B		20 MFD	300V ELECT
C-24C			
C-25A	73475	25 MFD	50V ELECT
C-25B		20 MFD	300V ELECT
C-25C		20 MFD	300V ELECT
C-26A	73475	20 MFD	300V ELECT
C-26B		20 MFD	300V ELECT
C-26C		20 MFD	300V ELECT
C-27	71183-14	.1 MFD	400 VOLT
C-28		.1 MFD	25V NON POLARIZED
C-29	71848-84	.001 MFD	CERAMIC
C-30	71838-84	.0068 MFD	CERAMIC
S-1	114245		POWER SW.
S-2	88370		CANCEL SW.
S-3	114257	4 POS.	SENSITIVITY TRIM & SW.
S-4	114257	4 POS.	SENSITIVITY TRIM & SW.
S-5	72223		FADER SW.
T-1	114253		OUTPUT TRANS.
T-2	114258		POWER TRANS.
T-3	114259		INPUT BOX TRANS.
LS-1	114354	3.5 OHM	8 IN. SPEAKER
LS-2	114353	8 OHM	12 IN. SPEAKER
LS-3	114000A	8 OHM	12 IN. SPEAKER
F-1	32198	15 AMP	250V FUSE
F-2	32243	8 AMP	FUSE
F-3	32243	8 AMP	120 VOLTS TUBE
F-4	32323	2 AMP	250 VOLTS FUSE
R.C.	112231		TWIBLE TONE
RT-1	82500	24V	SEL. RECT
RY-1	50328	50 SER.	124 VDC RELAY

A.C. SIGNAL CHART

USE BALLANTINE AC-VTVM OR HEATHKIT VOLTMETER AV-2 APPLY 0 MILLIVOLT AT 1000 CPS SIGNAL TO INPUT JACKS A & B. VOLUME CONTROL, BASS & TREBLE CONTROLS FULL CLOCKWISE BALANCE CONTROL SET IN MIDDLE. USE 5Ω 20 W RESISTOR AS OUTPUT LOAD FOR EACH CHANNEL.

TUBE	FUNCTION	PIN NO. 1	2	3	4	5	6	7	8	9
V1	7025	VA-CF	.35	.004					.07	.1	
V2	7025	VA-CF		.07	.1			.35	.004		
V3, V4	12 AU7	R-VA	.07					.45	.04	.01	
V5, V6	12 AX7	Ø	2.0	.18	.19			2.3	.045		
V7	12 AX7	VA-RECT	2					2	.035	.09	
V8, V9 V10, V11	6973	POWER AMP	.07		2.1			2.1		.07	.48
V12	5U4GB	RECT				350*		350*			

A.C. VOLTAGES MEASURED FROM GROUND
LINE VOLTAGE 117V
* MEASURED WITH VTVM

. . . . . MODEL 2300S SOUND SYSTEM

114512 – 7

00S