SCHEMATIC WIRING DIAGRAM – MODEL 526 H.F. AMPLIFIER

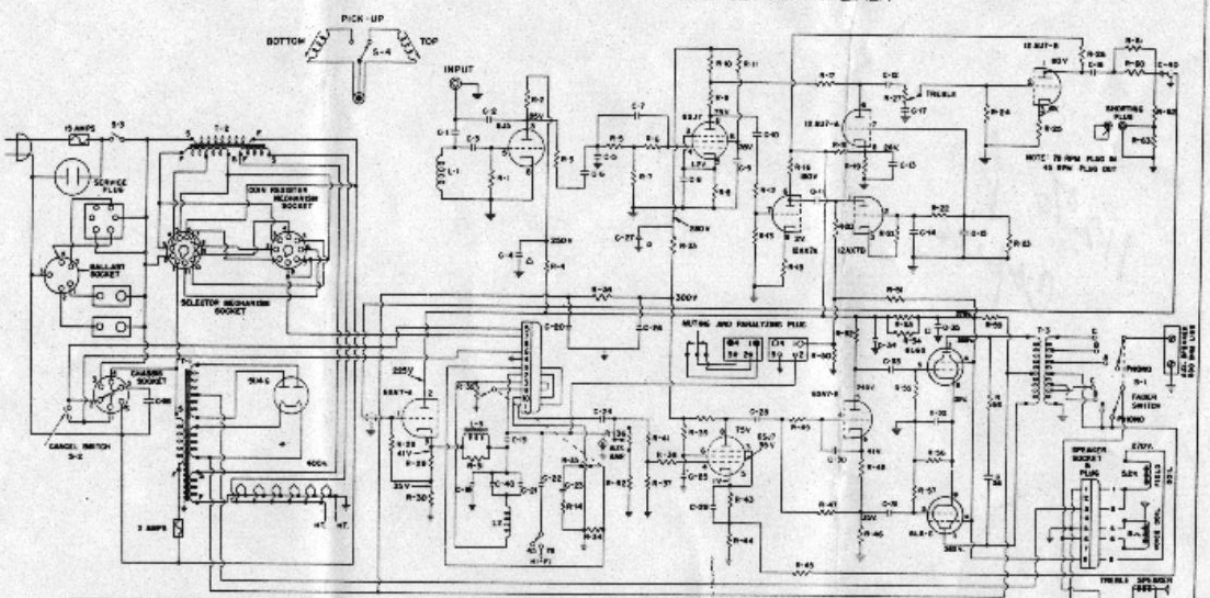

ITEM	PART NO.	VALUE	REMARKS
R-1	72244-32	68Ω	10% ½ WATT
R-2	72277-32	51K	5% 1 WATT
R-3	72234-32	68K	10% ½ WATT
R-4	72182-32	1K	10% ½ WATT
R-5	72234-32	390K	10% ½ WATT
R-6	72254-32	560K	10% ½ WATT
R-7	72234-32	68K	10% ½ WATT
R-8	72182-32	1K	10% ½ WATT
R-9	72244-32	68Ω	10% ½ WATT
R-10	72232-32	47K	10% ½ WATT
R-11	72244-32	68Ω	10% ½ WATT
R-12	72264-32	1MEG	10% ½ WATT
R-13	72262-32	820K	10% ½ WATT
R-14	72206-32	82Ω	10% ½ WATT
R-15	72239-32	47K	10% ½ WATT
R-16	72249-32	220K	10% ½ WATT
R-17	72268-32	680K	10% ½ WATT
R-18	72284-32	100K	5% 1 WATT
R-19	72218-32	12K	5% ½ WATT
R-20	72264-32	1MEG	10% ½ WATT
R-21	72232-32	47K	10% ½ WATT
R-22	72268-32	1.5MEG	10% ½ WATT
R-23	72264-32	1.5MEG	10% ½ WATT
R-24	72264-32	1MEG	10% ½ WATT
R-25	72214-32	8.2K	10% ½ WATT
R-26	72240-32	220Ω	10% ½ WATT

ITEM	PART NO.	VALUE	REMARKS
R-27	33044	5MEG	TREBLE TONE
R-28	72244-32	68Ω	10% ½ WATT
R-29	72214-32	8.2K	10% ½ WATT
R-30	72208-32	470Ω	10% ½ WATT
R-31	72234-32	68K	10% ½ WATT
R-32	33484	5K	VOLUME CONTROL
R-33	72234-32	68K	10% ½ WATT
R-34	72232-32	33K	10% ½ WATT
R-35	33484	50K	VOLUME CONTROL
R-36	72264-32	1MEG	10% ½ WATT
R-37	72262-32	680K	10% ½ WATT
R-38	72224-32	27K	10% ½ WATT
R-39	72284-32	100K	10% ½ WATT
R-40	72284-32	91K	10% ½ WATT
R-41	72248-32	220K	10% ½ WATT
R-42	72224-32	22K	10% ½ WATT
R-43	72282-32	680K	10% ½ WATT
R-44	72184-32	10K	5% ½ WATT
R-45	72320-32	3K	5% ½ WATT
R-46	72214-32	8.2K	10% ½ WATT
R-47	72282-32	680K	10% ½ WATT
R-48	72212-32	5.6K	10% ½ WATT
R-49	72224-32	18K	10% ½ WATT
R-50	72184-32	10K	10% ½ WATT
R-51	72244-32	68K	10% ½ WATT

ITEM	PART NO.	VALUE	REMARKS
R-52	72248-32	220K	10% ½ WATT
R-53	72224-32	22K	10% ½ WATT
R-54	72262-32	470K	10% 1 WATT
R-55	72262-32	470K	10% ½ WATT
R-56	72244-32	68K	10% ½ WATT
R-57	72262-32	470K	10% ½ WATT
R-58	72240-32	100K	10% ½ WATT
R-59	72244-32	68K	10% ½ WATT
R-60	72262-32	470K	10% ½ WATT
R-61	72262-32	390K	10% ½ WATT
R-62	72264-32	1MEG	10% ½ WATT
C-1	70671-285	5-MMFD	CERAMIC
C-2	70671-262	30MMFD	CERAMIC
C-3	71807-462	1MFD	10% 400WV.
C-4	73474	10MFD	1.400WV.D.
C-5	70534-142	100MMFD	CERAMIC
C-6	71746-44	.002MFD	20% 400WV.
C-7	70534-142	100MMFD	CERAMIC
C-8	70232-112	20MFD	25WV.
C-9	71774-44	1MFD	20% 400WV.
C-10	71746-44	.02MFD	20% 400WV.
C-11	71746-44	.02MFD	20% 400WV.
C-12	71746-44	.02MFD	20% 400WV.
C-13	73474	20MFD	25WV.

ITEM	PART NO.	VALUE	REMARKS
C-14	73210-502	1MFD	10% 200WV.
C-15	73210-502	1MFD	10% 200WV.
C-16	71746-44	.02MFD	20% 400WV.
C-17	70534-142	100MMFD	CERAMIC
C-18	73504-24	.005MFD	10% 400WV.
C-19	73210-502	1MFD	10% 200WV.
C-20	73474	20MFD	400WV.D.
C-21	73037-81	1MFD	10% 100WV.
C-22	73008-94	.001MFD	10% 200WV.
C-23	73037-81	1MFD	10% 100WV.
C-24	71746-44	.02MFD	20% 400WV.
C-25	71774-44	1MFD	20% 400WV.
C-26	73474	20MFD	400WV.D.
C-27	73474	20MFD	400WV.D.
C-28	71762	20MFD	20% 400WV.
C-29	73290-110	20MFD	25WV.
C-30	70682-262	50-MMFD	CERAMIC
C-31	71774-44	1MFD	20% 400WV.
C-32	73473	25MFD	50WV.
C-33	71774-44	1MFD	20% 400WV.
C-34	73474	20MFD	400WV.D.
C-35	73474	20MFD	400WV.D.
C-36	73008-94	.001MFD	20% 200WV.
C-37	73037-81	1MFD	10% 100WV.
C-38	73474	1MFD	600WV.

ITEM	PART NO.	REMARKS
T-1	33010	AMP POWER TRANS.
T-2	33025	JUNC POWER TRANS
T-3	33035	OUTPUT TRANS.
L-1	49896	OSCILLATOR COIL
L-2	33017	AIR CORE COIL 400HENRIES
L-3	34084	COILS 8 MGAL 25 HENRIES
W-1	33088	FADER SWITCH
S-2	33049	CANCEL SWITCH
S-3	33048	SWITCH (S.P.S.T.)
S-4	33020	MUTING SWITCH
	33788	LINE CORD
	34015	3 AMP FUSE
	33795	15 AMP FUSE
R-62	72214-32	8.2K 10% ½ WATT
R-63	72254-32	390K 10% ½ WATT
C-39	73404-5502	MFD +30% -10% 350 WV.
C-40	71770-24	.047 MFD 1 10% 400WV.

PART NO. 61045