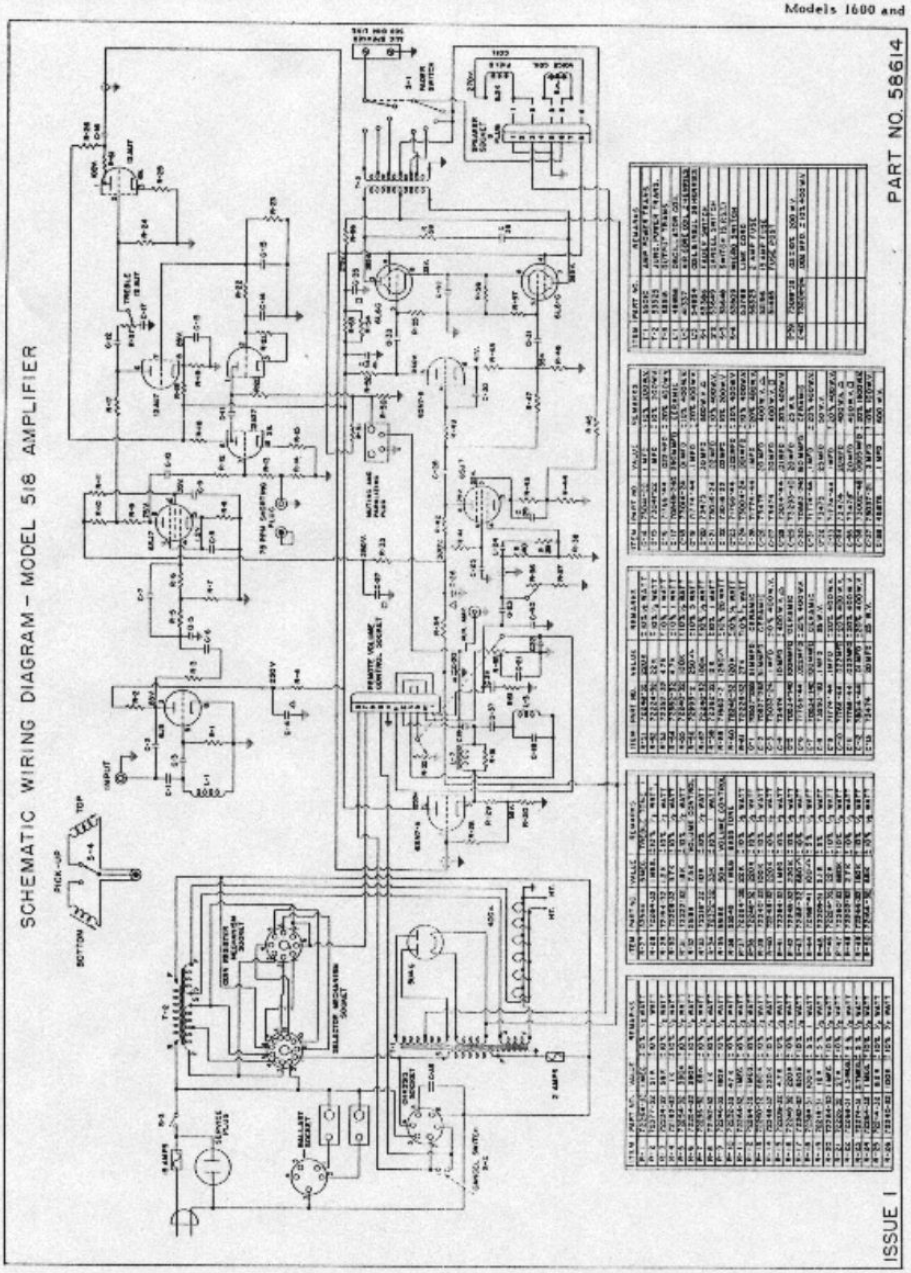
SCHEMATIC WIRING DIAGRAM – MODEL 518 AMPLIFIER
PART NO. 58614
ISSUE 1