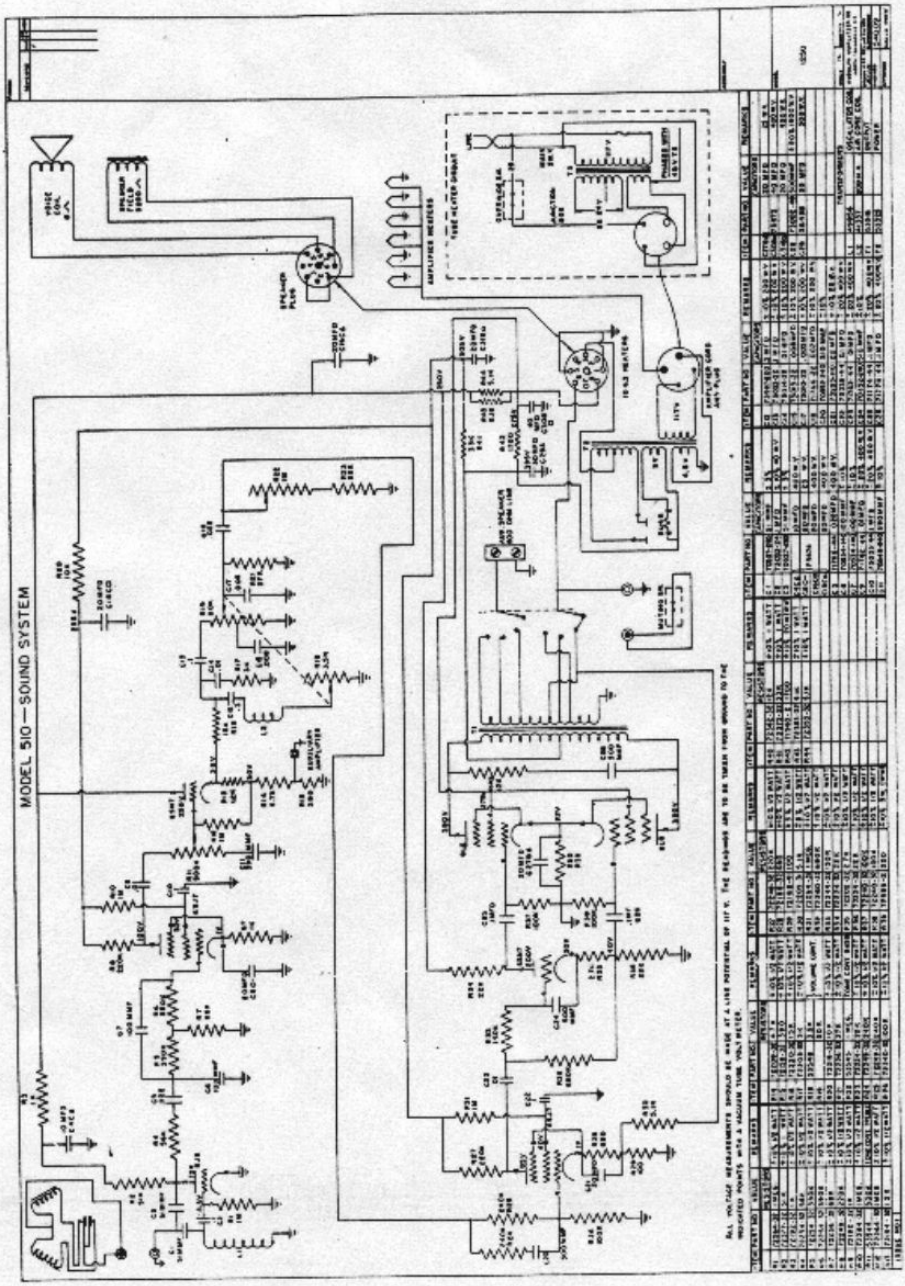

Fig. 41-Sound System Schematic